A	图面新发行	2011-08-15	Jine	OSCAR
B	添加塑脚直径	2013-10-17		Oscar

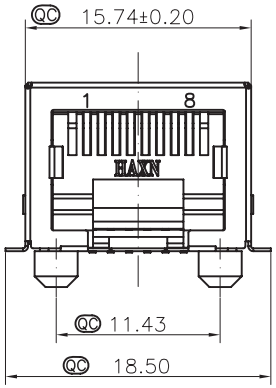

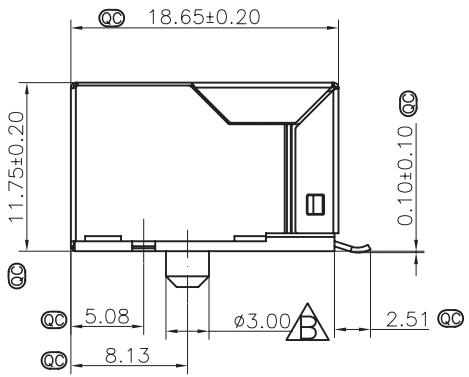

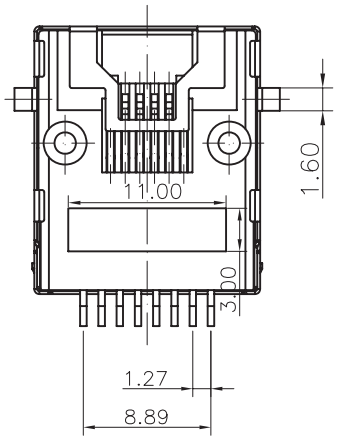

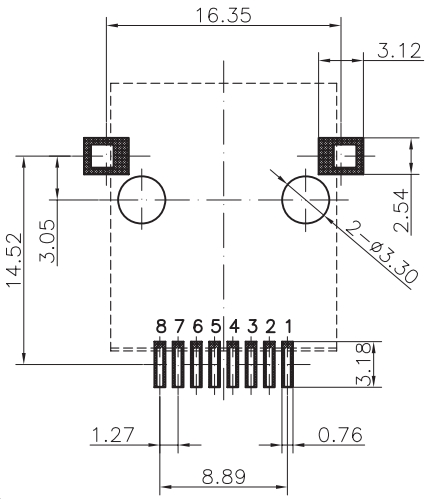

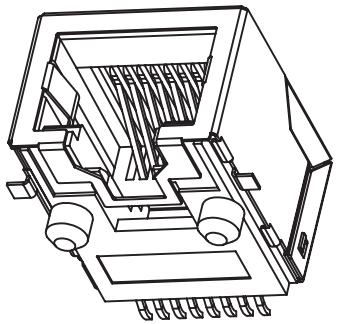

NOTES:

ELECTRICAL:

1. VOLTAGE RATING : 125 VAC RMS.
2. CURRENT RATING : 1.5 AMP.
3. CONTACT RESISTANCE : 50 MILLIOHMS MAX.
4. INSULATION RESISTANCE: 500 MEGOHMS MIN @ 500 VDC.
5. DIELECTRIC STRENGTH : 500 VAC RMS 50Hz, 1MIN.

MECHANICAL:

1. HOUSING MATERIAL : NYLON(PA46)+30%.G.F UL94V-0.
2. CONTACT MATERIAL : PHOSPHOR BRONZE T=0.35mm (C5210)
3. PLATING : GOLD-PLATED IN THE CONTACT AREA
4. SHIELD: COPPER ALLOY(OR STEEL ALLOY) 0.20mm THICKNESS
5. OPERATING LIFE : 750 CYCLES MIN.
6. PCB RETENTION PRE-SOLDER : 1 LB MIN.
7. PCB RETENTION POST-SOLDER: 10 LBS MIN.

ENVIRONMENTAL:

1. STORAGE : -40°C TO +85°C.
2. OPERATION: -40°C TO +85°C.
3. IR REFLOW PEAK SOLDING TEMPERATURE:255°C~265°C 5~10 SECONDS.
4. ROHS COMPLIANT

FCC PART 68, SUBPART F.

MATES WITH MODULAR PLUG CONFORMING TO

料品编码: 84 0 5 - 2 8 8 3 1 X

84 SERIES:
(SMT JACK)

产品类别:
01 -SMT H=11.5mm W=13.2 mm
02 -SMT H=11.5mm W=12.30 mm
03 -SMT H=11.65mm W=13.85mm
04 -SMT 铁脚式
05 -SMT H=11.75mm W=18.65mm
06 -SMT H=11.50mm W=14.60mm

SHIELD:
1 - W/O SHIELD
2 - 不开窗 3-开上天窗

Position
6 - 6 POSITION 8 - 8 POSITION
0 - 10 POSITION

CONTACTS:
4 - 4 CONTACTS 6 - 6 CONTACTS
8 - 8 CONTACTS 0 - 10 CONTACTS

电镜金u":
1 - Fu" 2-2u" 3-3u"
4 -6u" 5-15u"
6- 30u" 7-50u"

LOGO& PCB TYPE
0 - W/O LOGO
1 - W/HAXN LOGO
2 - W/HAXN & UL LOGO

Plastic Material& Color
1 - PBT+20%GF Black
2 - NYLON46 Black
3 - LCP Black

QC

A4

-N HUA XIN PERSONNEL WITHOUT WRITTEN AUTHORIZATION FROM SPEED TECH CORP.